DocuSign Envelope ID: 45931D1B-91C2-49F8-B9E4-305A83836C6B

PROJ. REFERENCE NO.	SHEET NO.
17BP.14.R.167	TMP-4

NOTE: PORTABLE SIGNAL SYSTEMS AND DEVICES WILL NEED TO BE ACTIVE FOR 24 HOURS FOR THE DURATION OF CONSTRUCTION. CONTRACTOR IS RESPONSIBLE FOR DESIGN, MAINTENANCE, AND OPERATION OF ALL EQUIPMENT.

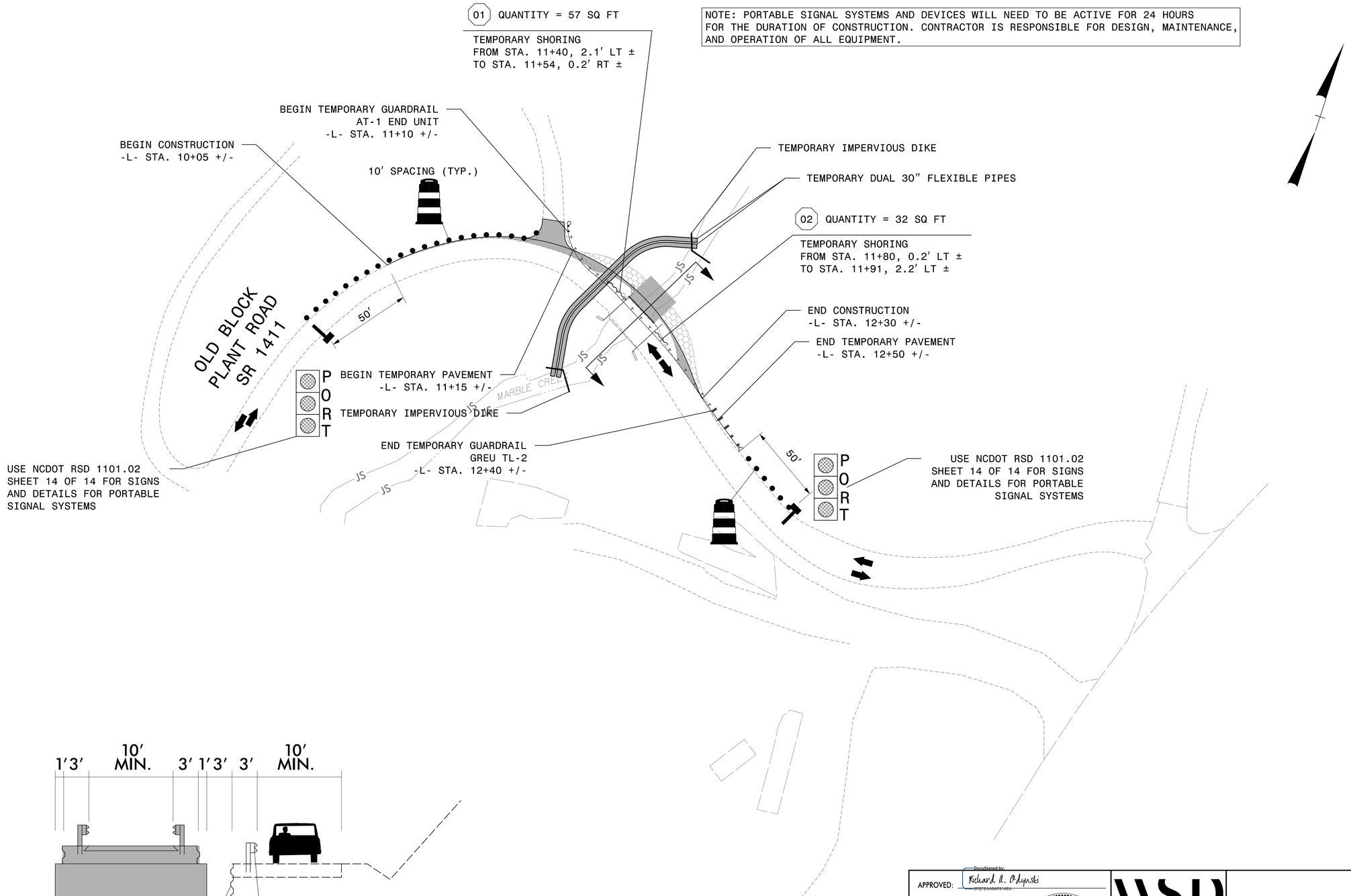

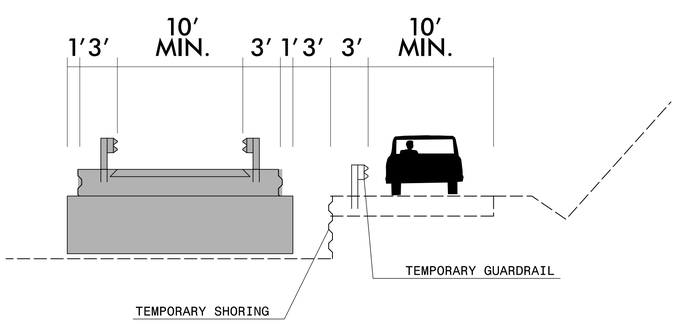

APPROVED: DocuSigned by: Richard A. Odynski 3F87E6A5AF814E4...

DATE: 12/6/2021

SEAL

NORTH CAROLINA PROFESSIONAL SEAL 037467 ENGINEER RICHARD A. ODYNSKI

DOCUMENT NOT CONSIDERED FINAL UNLESS ALL SIGNATURES COMPLETED

wsp

1001 Morehead Square Dr.
Suite 610
Charlotte NC, 28203

NC LIC. NO. F-0165

TRANSPORTATION MANAGEMENT PLAN
PHASE I DETAILS